LMH

Single Cell Range

Delivering quality

ALCAD

The front cover images show a selection of applications for which Alcad products are ideally suited.

Alcad have nearly 100 years' experience in the development and manufacture of pocket plate cells and batteries. Today, they offer the widest range of high quality nickel-cadmium batteries available throughout the world and this publication details the Single Cell ranges of pocket plate products.

Alcad nickel-cadmium batteries are the battery of choice for many applications. Their outstanding features are :

- **operation over a wide range of temperatures -40°C to +60°C**
- **life in excess of 25 years in many applications**
- **good performance at low temperatures**
- **resistance to high temperature ageing**
- **resistance to electrical abuse**
- **resistance to shock and vibration**
- **simple maintenance**
- **low installation cost**
- **low life cycle cost**

The major design features of the Alcad Single Cell ranges are :

- **fully welded internal construction of steel components**
- **strong welded polypropylene containers as standard**
- **flame retardant welded containers, as option**
- **flip-top flame arresting vents as standard (UL recognised)**

Alcad supports these Single Cell ranges with :

- **quality approved manufacture to ISO 9001**
- **full recycling service to protect the environment**

The Single Cell portfolio comprises three ranges of high, medium and low rate discharge types.

H Range

The H range uses very thin plates and is designed for applications where there is a demand for a relatively high current over short periods, usually less than 30 minutes in duration. The applications can have frequent or infrequent discharges. The range is typically used in starting and power back-up applications.

M Range

The M range is designed for applications where the batteries are usually required to sustain electrical loads for between 30 minutes to 3 hours or for « mixed » loads which involve a mixture of high and low discharge rates. The applications can have frequent or infrequent discharges. The range is typically used in power back-up applications.

L Range

The L range has the thickest plates and is designed for applications where the battery is required to provide a reliable source of energy over relatively long discharge periods. Normally, the current is relatively low in comparison with the total stored energy and the discharges are generally infrequent. Typical uses are power back-up and bulk energy storage.

Float-corrected data

Many nickel-cadmium batteries are used in stationary standby power applications where discharges occur infrequently and the battery is continuously charged by a float or constant potential charge. Under these circumstances there is a modification in the level of the discharge curve and allowances must be made for this when sizing the battery.

In order to simplify this process, the data Alcad supplies in this publication already takes into account this phenomenon. The data published by Alcad is the performance after prolonged floating and it can be used directly in battery sizing calculations.

This phenomenon occurs with all nickel-cadmium batteries, but some other manufacturers of nickel-cadmium batteries may not take this effect into account in published data.

When calculating for deep discharges (0.65 V and 0.85 V) it is not necessary to take this effect into account.

Contents

Construction features 4

L range

- Cell dimensions and internal resistance 5
- Cell performance data 6

M range

- Cell dimensions and internal resistance 10
- Cell performance data 11

H range

- Cell dimensions and internal resistance 15
- Cell performance data 16

Battery layout 21

Battery racks 23

Disposal and recycling 26

L|M|H

Single Cell Range

Delivering quality

ALCAD

Construction features

Terminal seal
This is mechanically clipped and provides an excellent seal. This minimizes carbonation deposits.

Flame arresting vent

Plate group bus
Connects the plate tabs with the terminal post. Plate tabs and terminal posts are projection welded to the plate group bus.

Plate tab
Spot welded to the plate side frames, to the upper edge of the pocket plate and to the plate group bus.

Separating grids
These separate the plates and insulate the plate frames from each other. The grids allow free circulation of electrolyte between the plates.

Plate
Horizontal pockets of double-perforated steel strips.

Plate frame
Seals the plate pockets and serves as a current collector.

Cell dimensions and internal resistance

L RANGE

L type cells are normally supplied as single cells, taped together into blocks or assembled in steel crates.

Cell type	Capacity at the 5hr rate	Volume of liquid electrolyte above plates	Weight per cell		Overall height H		Width per cell W*		Length per cell L		Max no of cells as taped block	Internal resistance	Electrolyte height between Min - Max
	(Ah)	(cc)	(kg)	(lbs)	(mm)	(ins)	(mm)	(ins)	(mm)	(ins)	▲	(mOhm)	(mm)
LC10P	10	146	1.64	3.61	275	10.83	121	4.76	42	1.65	5	15.0	35
LC15P	15	146	1.69	3.72	275	10.83	121	4.76	42	1.65	5	10.0	35
LC21P	21	143	1.86	4.09	275	10.83	121	4.76	42	1.65	5	7.14	35
LC30P	30	143	1.96	4.31	275	10.83	121	4.76	42	1.65	5	5.00	35
LC38P	38	238	3.00	6.60	275	10.83	121	4.76	66	2.60	5	3.95	35
LC45P	45	238	3.00	6.60	275	10.83	121	4.76	66	2.60	5	3.33	35
LC59P	59	235	3.26	7.17	275	10.83	121	4.76	66	2.60	5	2.54	35
LC70P	70	559	5.96	13.1	358	14.09	192	7.56	68	2.68	3	1.78	35
LC85P	85	552	6.64	14.6	358	14.09	192	7.56	68	2.68	3	1.45	35
LC105P	105	552	6.64	14.6	358	14.09	192	7.56	68	2.68	3	1.17	50
LC135P	135	546	7.23	15.9	358	14.09	192	7.56	68	2.68	2	0.91	50
LC170P	170	771	9.56	21.0	358	14.09	192	7.56	93	3.66	2	0.72	50
LC205P	205	765	10.2	22.4	358	14.09	192	7.56	93	3.66	-	0.60	50
LC220P	220	771	11.3	24.9	414	16.30	192	7.56	93	3.66	-	0.65	50
LC260P	260	765	12.1	26.6	414	16.30	192	7.56	93	3.66	-	0.55	50
LC310P	310	1020	15.5	34.1	414	16.30	192	7.56	122	4.80	-	0.46	50
LC355P	355	1015	16.2	35.6	414	16.30	192	7.56	122	4.80	-	0.40	50
LB385P	387	1100	17.5	38.5	405	15.94	195	7.68	146	5.75	-	0.37	50
LB430P	429	1200	19.5	42.9	405	15.94	195	7.68	159	6.26	-	0.33	50
LB470P	470	1300	21.0	46.2	405	15.94	195	7.68	171	6.73	-	0.30	50
LB510P	510	1400	23.0	50.6	405	15.94	195	7.68	183	7.20	-	0.28	50
LB600P	600	1700	28.0	61.6	405	15.94	195	7.68	219	8.62	-	0.24	50
LB645P	645	1800	30.0	66.0	405	15.94	195	7.68	232	9.13	-	0.22	50
LB770P	770	2100	34.5	75.9	405	15.94	195	7.68	268	10.55	-	0.18	50
LB860P	860	2400	40.0	88.0	405	15.94	195	7.68	304	11.97	-	0.17	50
LB1020P	1020	2800	46.0	101.2	405	15.94	195	7.68	352	13.86	-	0.14	50
LB1070P	1070	3000	49.5	108.9	405	15.94	195	7.68	377	14.84	-	0.13	50
LB1280P	1280	3500	57.5	126.5	405	15.94	195	7.68	437	17.20	-	0.11	50
LB1450P	1450	4000	66.0	145.2	405	15.94	195	7.68	497	19.57	-	0.10	50
LB1540P	1540	4200	69.0	151.8	405	15.94	195	7.68	522	20.55	-	0.09	50

▲ Taped block length = cell length x no. of cells + 2 mm/0.1 in.

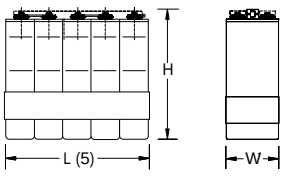

LC10P - LC355P
*add 2 mm/0.1 in. to the width when calculating taped cell blocks.

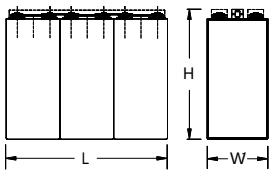

LB385P - LB1540P

Cell connection bolt per pole:

LC10P to LC 59P:	M6	LB 385P to LB 510P:	2 x M10
LC 70P:	M8	LB 600P & LB 645P:	3 x M10
LC 85P to LC260P:	M10	LB 770P to LB 1020P:	4 x M10
LC310P to LC355P:	2 x M10	LB 1070P & LB 1280:	5 x M10
		LB 1450 & LB 1540:	6 x M10

L RANGE Cell performance

Available amperes at 20 ± 5 °C
Discharge current is for fully charged cells after prolonged float charge

Final voltage: 1.00 Volt per cell

Cell type	C_5 Ah	HOURS					MINUTES								SECONDS		
		10 h	8 h	5 h	3 h	2 h	90 min	60 min	30 min	20 min	15 min	10 min	5 min	1 min	30 s	5 s	1 s
LC10P	10	1.02	1.26	2.00	3.18	4.28	5.03	6.09	7.64	8.37	8.74	9.33	10.5	12.7	13.6	16.0	18.0
LC15P	15	1.52	1.89	3.00	4.77	6.41	7.55	9.13	11.5	12.6	13.1	14.0	15.8	19.1	20.3	24.0	27.0
LC21P	21	2.13	2.65	4.20	6.68	8.98	10.6	12.8	16.0	17.6	18.3	19.6	22.1	26.7	28.5	33.7	37.8
LC30P	30	3.05	3.79	6.00	9.55	12.8	15.1	18.3	22.9	25.1	26.2	28.0	31.5	38.1	40.7	48.1	54.0
LC38P	38	3.86	4.80	7.60	12.1	16.2	19.1	23.1	29.0	31.8	33.2	35.5	39.9	48.3	51.5	60.9	68.4
LC45P	45	4.57	5.68	9.00	14.3	19.2	22.6	27.4	34.4	37.7	39.3	42.0	47.3	57.2	61.0	72.1	81.0
LC59P	59	6.00	7.45	11.8	18.8	25.2	29.7	35.9	45.1	49.4	51.6	55.1	62.0	74.9	79.9	94.5	106
LC70P	70	7.11	8.84	14.0	22.7	29.9	37.0	46.9	57.5	64.9	69.1	76.2	87.9	112	121	136	147
LC85P	85	8.64	10.7	17.0	27.5	36.3	45.0	56.9	69.9	78.8	84.0	92.5	107	136	147	165	178
LC105P	105	10.7	13.3	21.0	34.0	46.4	55.6	70.3	86.3	97.3	104	114	132	168	182	203	220
LC135P	135	13.7	17.0	27.0	43.7	59.6	71.4	90	111	125	133	147	170	215	233	261	283
LC170P	170	17.3	21.5	34.0	55.1	75.1	89.9	114	140	158	168	185	214	271	294	329	356
LC205P	205	20.8	25.9	41.0	66.4	90.5	108	137	168	190	203	223	257	327	354	397	430
LC220P	220	22.4	27.8	44.0	71.1	97.0	116	144	177	200	214	234	269	342	371	417	431
LC260P	260	26.4	32.8	52.0	84.0	115	137	170	209	237	253	277	318	404	438	493	510
LC310P	310	31.5	39.1	62.0	100	137	164	202	250	282	301	330	379	482	522	587	608
LC355P	355	36.1	44.8	71.0	115	156	187	232	286	323	345	378	434	552	598	673	696
LB385P	387	39.1	48.6	77.0	124	170	203	251	310	350	374	410	471	599	649	729	755
LB430P	429	43.6	54.2	85.8	139	189	226	280	345	390	417	456	525	667	723	813	841
LB470P	470	47.8	59.3	94.0	152	207	248	307	378	428	457	500	575	731	792	890	921
LB510P	510	51.8	64.4	102	165	225	269	333	411	464	496	543	624	793	859	966	1000
LB600P	600	61.0	75.8	120	194	265	317	392	483	546	583	638	734	933	1010	1140	1180
LB645P	645	65.5	81.4	129	208	284	340	421	519	587	627	686	789	1000	1090	1220	1260
LB770P	770	78.2	97.2	154	249	339	406	502	620	701	749	819	942	1200	1300	1460	1510
LB860P	860	87.4	109	172	278	379	454	561	692	783	836	915	1050	1340	1450	1630	1690
LB1020P	1020	104	129	204	329	450	538	666	821	928	992	1090	1250	1590	1720	1930	2000
LB1070P	1070	109	135	214	346	472	564	698	861	974	1040	1140	1310	1660	1800	2030	2100
LB1280P	1280	130	162	256	413	564	675	835	1030	1170	1250	1360	1570	1990	2160	2430	2510
LB1450P	1450	147	183	290	468	639	765	946	1170	1320	1410	1540	1770	2260	2440	2750	2840
LB1540P	1540	156	194	308	497	679	812	1000	1240	1400	1500	1640	1880	2400	2590	2920	3020

Cell performance L RANGE

Available amperes at 20 ± 5 °C
Discharge current is for fully charged cells after prolonged float charge

Final voltage: 1.05 Volts per cell

Cell type	C_5 Ah	HOURS					MINUTES								SECONDS		
		10 h	8 h	5 h	3 h	2 h	90 min	60 min	30 min	20 min	15 min	10 min	5 min	1 min	30 s	5 s	1 s
LC10P	10	1.01	1.25	1.98	2.84	3.74	4.46	5.34	6.53	6.96	7.16	7.56	8.29	10.1	10.9	12.9	14.9
LC15P	15	1.51	1.88	2.97	4.26	5.62	6.68	8.00	9.79	10.4	10.7	11.3	12.4	15.1	16.3	19.3	22.3
LC21P	21	2.11	2.63	4.16	5.96	7.86	9.36	11.2	13.7	14.6	15.0	15.9	17.4	21.2	22.8	27.0	31.3
LC30P	30	3.02	3.75	5.94	8.51	11.2	13.4	16.0	19.6	20.9	21.5	22.7	24.9	30.2	32.6	38.6	44.7
LC38P	38	3.82	4.75	7.52	10.8	14.2	16.9	20.3	24.8	26.4	27.2	28.7	31.5	38.3	41.2	48.9	56.6
LC45P	45	4.53	5.63	8.91	12.8	16.8	20.1	24.0	29.4	31.3	32.2	34.0	37.3	45.4	48.8	57.9	67.0
LC59P	59	5.94	7.38	11.7	16.7	22.1	26.3	31.5	38.5	41.0	42.2	44.6	48.9	59.5	64.0	75.9	87.8
LC70P	70	7.04	8.75	13.9	20.3	27.2	33.0	39.2	48.1	53.4	57.5	63.3	72.4	91.7	99.4	108	120
LC85P	85	8.55	10.6	16.8	24.6	33.0	40.1	47.5	58.4	64.8	69.8	76.9	87.9	111	121	131	145
LC105P	105	10.6	13.1	20.8	30.4	40.7	49.5	58.7	72.1	80.0	86.2	95.0	109	138	149	162	179
LC135P	135	13.6	16.9	26.7	39.1	52.4	63.6	75.5	92.7	103	111	122	140	177	192	209	231
LC170P	170	17.1	21.3	33.7	49.2	65.9	80.1	95.1	117	130	140	154	176	223	241	263	291
LC205P	205	20.6	25.6	40.6	59.3	79.5	96.6	115	141	156	168	185	212	268	291	317	350
LC220P	220	22.1	27.5	43.6	63.7	85.1	103	121	148	164	175	196	223	280	303	338	360
LC260P	260	26.2	32.5	51.5	75.2	101	122	143	175	194	207	231	264	331	358	400	426
LC310P	310	31.2	38.8	61.4	89.7	120	145	171	208	232	247	276	314	394	426	477	508
LC355P	355	35.7	44.4	70.3	103	137	166	196	238	265	283	316	360	451	488	546	581
LB385P	387	38.7	48.1	76.2	111	149	180	212	258	288	307	342	390	490	530	592	630
LB430P	429	43.2	53.6	85.0	124	166	201	236	288	321	342	381	435	545	590	660	702
LB470P	470	47.3	58.8	93.1	136	182	220	259	315	351	375	418	476	598	646	723	769
LB510P	510	51.3	63.8	101	148	197	239	281	342	381	407	453	517	648	701	785	835
LB600P	600	60.4	75.0	119	174	232	281	331	403	449	478	533	608	763	825	923	982
LB645P	645	64.9	80.6	128	187	250	302	355	433	482	514	573	654	820	887	992	1060
LB770P	770	77.5	96.3	152	223	298	361	424	517	576	614	684	780	979	1060	1190	1260
LB860P	860	86.5	108	170	249	333	403	474	577	643	686	764	872	1090	1180	1320	1410
LB1020P	1020	103	128	202	295	395	478	562	685	763	813	907	1030	1300	1400	1570	1670
LB1070P	1070	108	134	212	310	414	502	590	718	800	853	951	1080	1360	1470	1650	1750
LB1280P	1280	129	160	253	370	495	600	705	859	957	1020	1140	1300	1630	1760	1970	2100
LB1450P	1450	146	181	287	420	561	680	799	973	1080	1160	1290	1470	1850	1990	2230	2370
LB1540P	1540	155	193	305	446	596	722	849	1030	1150	1230	1370	1560	1960	2120	2370	2520

L RANGE Cell performance

Available amperes at 20 ± 5 °C
Discharge current is for fully charged cells after prolonged float charge

Final voltage: 1.10 Volts per cell

Cell type	C_5 Ah	HOURS					MINUTES								SECONDS		
		10 h	8 h	5 h	3 h	2 h	90 min	60 min	30 min	20 min	15 min	10 min	5 min	1 min	30 s	5 s	1 s
LC10P	10	0.96	1.19	1.75	2.54	3.36	3.98	4.60	5.19	5.61	5.76	6.02	6.45	7.77	8.43	10.0	11.3
LC15P	15	1.44	1.78	2.62	3.81	5.04	5.97	6.90	7.78	8.42	8.64	9.03	9.67	11.7	12.7	15.0	16.9
LC21P	21	2.01	2.50	3.67	5.34	7.06	8.35	9.66	10.9	11.8	12.1	12.6	13.5	16.3	17.7	21.0	23.6
LC30P	30	2.87	3.57	5.24	7.62	10.1	11.9	13.8	15.6	16.8	17.3	18.1	19.3	23.3	25.3	30.0	33.8
LC38P	38	3.64	4.52	6.64	9.65	12.8	15.1	17.5	19.7	21.3	21.9	22.9	24.5	29.5	32.0	38.1	42.8
LC45P	45	4.31	5.35	7.86	11.4	15.1	17.9	20.7	23.3	25.2	25.9	27.1	29.0	35.0	38.0	45.1	50.6
LC59P	59	5.64	7.01	10.3	15.0	19.8	23.5	27.1	30.6	33.1	34.0	35.5	38.0	45.8	49.8	59.1	66.4
LC70P	70	6.70	8.32	12.2	17.9	23.9	27.8	31.9	38.4	43.5	45.9	49.7	57.8	73.5	79.8	88.8	96.1
LC85P	85	8.13	10.1	14.9	21.7	29.0	33.7	38.8	46.6	52.8	55.7	60.4	70.2	89.2	96.9	108	117
LC105P	105	10.0	12.5	18.3	26.9	35.8	41.7	47.9	57.5	65.2	68.8	74.6	86.7	110	120	133	144
LC135P	135	12.9	16.0	23.6	34.5	46.1	53.6	61.5	74.0	83.8	88.4	95.9	111	142	154	171	185
LC170P	170	16.3	20.2	29.7	43.5	58.0	67.5	77.5	93.2	106	111	121	140	178	194	216	233
LC205P	205	19.6	24.4	35.8	52.4	69.9	81.4	93.5	112	127	134	146	169	215	234	260	281
LC220P	220	21.0	26.2	38.4	56.3	74.6	86.1	98.6	119	133	141	153	179	228	245	265	268
LC260P	260	24.9	30.9	45.4	66.5	88.1	102	117	140	157	167	181	211	270	289	313	317
LC310P	310	29.7	36.9	54.2	79.3	105	121	139	167	188	199	216	252	321	345	373	377
LC355P	355	34.0	42.2	62.0	90.8	120	139	159	192	215	228	247	288	368	395	427	432
LB385P	387	36.8	45.8	67.3	98.5	131	151	173	208	233	247	268	313	399	428	463	469
LB430P	429	41.0	51.0	75.0	110	145	168	192	232	260	275	299	348	445	477	516	522
LB470P	470	45.0	55.9	82.1	120	159	184	211	254	284	301	327	382	487	523	565	572
LB510P	510	48.8	60.6	89.1	130	173	200	229	275	309	327	355	414	529	568	613	621
LB600P	600	57.4	71.3	105	153	203	235	269	324	363	385	418	487	622	668	722	730
LB645P	645	61.7	76.7	113	165	219	253	289	348	390	414	449	524	669	718	776	785
LB770P	770	73.7	91.5	135	197	261	302	345	416	466	494	536	625	799	857	926	937
LB860P	860	82.3	102	150	220	292	337	385	464	521	551	599	698	892	957	1030	1050
LB1020P	1020	97.6	121	178	261	346	399	457	551	617	654	710	828	1060	1140	1230	1240
LB1070P	1070	102	127	187	274	363	419	479	578	648	686	745	869	1110	1190	1290	1300
LB1280P	1280	122	152	224	327	434	501	574	691	775	821	891	1040	1330	1420	1540	1560
LB1450P	1450	139	172	253	371	492	568	650	783	878	930	1010	1180	1500	1610	1740	1770
LB1540P	1540	147	183	269	394	522	603	690	832	932	987	1070	1250	1600	1710	1850	1880

Cell performance L RANGE

Available amperes at 20 ± 5 °C
Discharge current is for fully charged cells after prolonged float charge

Final voltage: 1.14 Volts per cell

Cell type	C_5 Ah	HOURS					MINUTES								SECONDS		
		10 h	8 h	5 h	3 h	2 h	90 min	60 min	30 min	20 min	15 min	10 min	5 min	1 min	30 s	5 s	1 s
LC10P	10	0.90	1.12	1.51	2.26	2.47	2.86	3.25	3.78	4.05	4.18	4.34	4.86	5.93	6.49	7.78	8.72
LC15P	15	1.35	1.68	2.27	3.39	3.70	4.28	4.88	5.68	6.07	6.27	6.51	7.29	8.89	9.73	11.7	13.1
LC21P	21	1.89	2.35	3.18	4.74	5.18	6.00	6.83	7.95	8.49	8.78	9.12	10.2	12.4	13.6	16.3	18.3
LC30P	30	2.70	3.36	4.54	6.78	7.40	8.57	9.76	11.4	12.1	12.5	13.0	14.6	17.8	19.5	23.3	26.2
LC38P	38	3.43	4.26	5.75	8.58	9.37	10.9	12.4	14.4	15.4	15.9	16.5	18.5	22.5	24.7	29.5	33.2
LC45P	45	4.06	5.04	6.81	10.2	11.1	12.9	14.6	17.0	18.2	18.8	19.5	21.9	26.7	29.2	35.0	39.3
LC59P	59	5.32	6.61	8.93	13.3	14.5	16.9	19.2	22.3	23.9	24.7	25.6	28.7	35.0	38.3	45.9	51.5
LC70P	70	6.31	7.84	10.6	15.8	19.9	22.5	25.4	30.5	34.2	36.6	39.7	45.5	59.5	64.1	69.1	77.4
LC85P	85	7.66	9.52	12.9	19.2	24.1	27.3	30.8	37.0	41.6	44.4	48.2	55.3	72.2	77.8	84.0	94.0
LC105P	105	9.47	11.8	15.9	23.7	29.8	33.7	38.0	45.7	51.4	54.9	59.6	68.3	89.2	96.1	104	116
LC135P	135	12.2	15.1	20.4	30.5	38.3	43.4	48.9	58.8	66.0	70.6	76.6	87.8	115	124	133	149
LC170P	170	15.3	19.0	25.7	38.4	48.3	54.6	61.6	74.0	83.2	88.8	96.5	111	144	156	168	188
LC205P	205	18.5	23.0	31.0	46.3	58.2	65.9	74.3	89.2	100	107	116	133	174	188	203	227
LC220P	220	19.8	24.6	33.3	49.7	61.9	69.9	79.7	94.2	106	112	122	140	182	198	212	215
LC260P	260	23.4	29.1	39.4	58.7	73.2	82.6	94.2	111	126	132	144	166	215	233	250	254
LC310P	310	27.9	34.7	46.9	70.0	87.2	98.5	112	133	150	158	172	198	256	278	298	303
LC355P	355	32.0	39.8	53.7	80.2	99.9	113	129	152	171	181	197	226	293	319	341	346
LB385P	387	34.7	43.1	58.3	87.0	108	122	139	165	186	196	214	245	318	346	370	376
LB430P	429	38.7	48.1	65.0	96.9	121	136	155	184	207	218	238	273	354	385	413	419
LB470P	470	42.4	52.7	71.2	106	132	149	170	201	227	239	261	300	388	422	452	459
LB510P	510	46.0	57.1	77.2	115	143	162	185	218	246	260	283	325	421	458	490	498
LB600P	600	54.1	67.2	90.8	136	169	191	217	257	290	305	333	382	496	539	577	586
LB645P	645	58.2	72.3	97.7	146	181	205	234	276	312	328	358	411	533	579	620	630
LB770P	770	69.4	86.3	117	174	217	245	279	330	372	392	427	491	636	691	740	752
LB860P	860	77.5	96.3	130	194	242	273	312	368	415	438	477	548	710	772	827	839
LB1020P	1020	92.0	114	154	230	287	324	369	437	493	519	566	650	842	916	981	995
LB1070P	1070	96.5	120	162	242	301	340	388	458	517	545	593	682	884	961	1030	1040
LB1280P	1280	115	143	194	289	360	407	464	548	618	652	710	816	1060	1150	1230	1250
LB1450P	1450	131	162	220	327	408	461	525	621	700	738	804	924	1200	1300	1390	1420
LB1540P	1540	139	173	233	348	433	489	558	659	744	784	854	981	1270	1380	1480	1500

M RANGE Cell dimensions and internal resistance

M type cells are normally supplied as single cells, taped together into blocks or assembled in steel crates.

Cell type	Capacity at the 5hr rate (Ah)	Volume of liquid electrolyte above plates (cc)	Weight per cell (kg)	Weight per cell (lbs)	Overall height H (mm)	Overall height H (ins)	Width per cell W* (mm)	Width per cell W* (ins)	Length per cell L (mm)	Length per cell L (ins)	Max no of cells as taped block ▲	Internal resistance (mOhm)	Electrolyte height between Min - Max (mm)
MC9P	9	146	1.64	3.6	275	10.83	121	4.76	42	1.65	5	6.89	35
MC14P	14	146	1.69	3.7	275	10.83	121	4.76	42	1.65	5	4.43	35
MC22P	22	143	1.91	4.2	275	10.83	121	4.76	42	1.65	5	2.82	35
MC31P	31	140	2.10	4.6	275	10.83	121	4.76	42	1.65	5	2.00	35
MC39P	39	235	3.07	6.8	275	10.83	121	4.76	66	2.60	5	1.59	35
MC47P	47	232	3.28	7.2	275	10.83	121	4.76	66	2.60	5	1.32	35
MC55P	55	230	3.47	7.6	275	10.83	121	4.76	66	2.60	5	1.13	35
MC70P	70	552	6.26	13.8	358	14.09	192	7.56	68	2.68	3	1.11	35
MC90P	90	546	6.56	14.4	358	14.09	192	7.56	68	2.68	3	0.87	50
MC110P	110	539	7.22	15.9	358	14.09	192	7.56	68	2.68	2	0.71	50
MC130P	130	532	7.68	16.9	358	14.09	192	7.56	68	2.68	2	0.60	50
MC145P	145	758	9.86	21.7	358	14.09	192	7.56	93	3.66	-	0.54	50
MC165P	165	751	10.3	22.7	358	14.09	192	7.56	93	3.66	-	0.47	50
MC185P	185	744	10.7	23.5	358	14.09	192	7.56	93	3.66	-	0.42	50
MC215P	215	751	12.3	27.1	414	16.30	192	7.56	93	3.66	-	0.40	50
MC240P	240	744	12.8	28.2	414	16.30	192	7.56	93	3.66	-	0.36	50
MC285P	285	1005	16.2	35.6	414	16.30	192	7.56	122	4.80	-	0.30	50
MC310P	310	996	16.7	36.7	414	16.30	192	7.56	122	4.80	-	0.28	50
MC335P	335	989	17.3	38.1	414	16.30	192	7.56	122	4.80	-	0.26	50
MB370P	369	1200	19.5	42.9	405	15.94	195	7.68	159	6.26	-	0.23	50
MB390P	392	1300	21.0	46.2	405	15.94	195	7.68	171	6.73	-	0.22	50
MB415P	415	1400	23.0	50.6	405	15.94	195	7.68	183	7.20	-	0.21	50
MB440P	438	1400	23.5	51.7	405	15.94	195	7.68	183	7.20	-	0.20	50
MB460P	461	1400	24.0	52.8	405	15.94	195	7.68	183	7.20	-	0.19	50
MB505P	505	1600	27.5	60.5	405	15.94	195	7.68	213	8.39	-	0.17	50
MB555P	555	1800	30.0	66.0	405	15.94	195	7.68	232	9.13	-	0.15	50
MB625P	625	2100	34.5	75.9	405	15.94	195	7.68	268	10.55	-	0.14	50
MB690P	690	2100	36.0	79.2	405	15.94	195	7.68	268	10.55	-	0.12	50
MB740P	740	2400	40.0	88.0	405	15.94	195	7.68	304	11.97	-	0.12	50
MB830P	830	2800	46.0	101.2	405	15.94	195	7.68	352	13.86	-	0.10	50
MB920P	920	2800	48.0	105.6	405	15.94	195	7.68	352	13.86	-	0.09	50
MB965P	965	3000	50.5	111.1	405	15.94	195	7.68	372	14.65	-	0.09	50
MB1040P	1040	3500	57.5	126.5	405	15.94	195	7.68	437	17.20	-	0.08	50
MB1150P	1150	3500	60.0	132.0	405	15.94	195	7.68	437	17.20	-	0.07	50
MB1220P	1220	4100	67.5	148.5	405	15.94	195	7.68	510	20.08	-	0.07	50
MB1390P	1390	4200	72.0	158.4	405	15.94	195	7.68	522	20.55	-	0.06	50

▲ Taped block length = cell length x no. of cells + 2 mm/0.1 in.

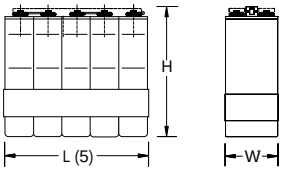

MC9P - MC335P
*add 2 mm/0.1 in. to the width when calculating taped cell blocks.

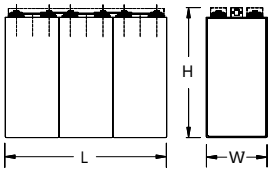

MB370P - MB1390P

Cell connection bolt per pole:

MC 9P to MC 55P: M6
MC 70P & MC 90P: M8
MC 110P to MC 240P: M10
MC 285P to MC 335P: 2 x M10

MB 370P to MB 460P: 2 x M10
MB 505P to MB 690P: 3 x M10
MB 740P to MB 920P: 4 x M10
MB 965P: 6 x M10
MB 1040P & MB 1150P: 5 x M10
MB 1120P to MB 1390P: 6 x M10

Cell performance M RANGE

Available amperes at 20 ± 5 °C
Discharge current is for fully charged cells after prolonged float charge

Final voltage: 1.00 Volt per cell

Cell type	C_5 Ah	HOURS				MINUTES								SECONDS		
		8 h	5 h	3 h	2 h	90 min	60 min	30 min	20 min	15 min	10 min	5 min	1 min	30 s	5 s	1 s
MC9P	9	1.14	1.80	2.94	4.29	5.16	6.58	8.86	10.4	11.4	13.0	16.2	24.0	27.5	34.6	38.1
MC14P	14	1.77	2.80	4.58	6.68	8.02	10.2	13.8	16.2	17.8	20.3	25.2	37.3	42.7	53.8	59.3
MC22P	22	2.78	4.40	7.19	10.5	12.5	16.3	22.0	25.8	28.2	31.9	38.9	55.5	62.4	75.2	79.6
MC31P	31	3.91	6.20	10.1	14.8	17.7	22.9	31.0	36.4	39.7	44.9	54.9	78.2	87.9	106	112
MC39P	39	4.92	7.80	12.8	18.6	22.2	28.9	39.0	45.8	49.9	56.5	69.0	98.4	111	133	141
MC47P	47	5.93	9.40	15.4	22.4	26.8	34.8	47.0	55.1	60.1	68.1	83.2	119	133	161	170
MC55P	55	6.94	11.0	18.0	26.2	31.4	40.7	55.0	64.5	70.4	79.7	97.3	139	156	188	199
MC70P	70	8.84	14.0	22.9	33.5	40.4	52.4	74.6	87.2	95.8	109	133	187	213	259	276
MC90P	90	11.4	18.0	29.4	43.0	51.9	67.3	96.0	112	123	140	171	241	274	333	355
MC110P	110	13.9	22.0	36.0	52.6	63.4	82.3	117	137	151	171	209	294	335	407	433
MC130P	130	16.4	26.0	42.5	62.1	75.0	97.2	139	162	178	202	246	348	395	481	512
MC145P	145	18.3	29.0	47.4	69.3	83.6	108	155	181	198	226	275	388	441	537	571
MC165P	165	20.8	33.0	54.0	78.9	95.1	123	176	206	226	257	313	441	502	611	650
MC185P	185	23.4	37.0	60.5	88.4	107	138	197	231	253	288	351	495	563	685	729
MC215P	215	27.1	43.0	70.3	103	124	161	227	266	291	328	397	553	619	741	782
MC240P	240	30.3	48.0	78.5	115	138	180	254	297	325	366	443	617	691	828	873
MC285P	285	36.0	57.0	93.2	136	164	213	302	353	386	435	527	733	820	983	1040
MC310P	310	39.1	62.0	101	148	179	232	328	384	419	473	573	797	892	1070	1130
MC335P	335	42.3	67.0	110	160	193	251	354	415	453	511	619	862	964	1160	1220
MB370P	369	46.6	73.8	121	176	213	276	390	457	499	563	682	949	1060	1270	1340
MB390P	392	49.5	78.4	128	187	226	293	415	485	530	598	724	1010	1130	1350	1430
MB415P	415	52.4	83.0	136	198	239	310	439	514	561	634	767	1070	1190	1430	1510
MB440P	438	55.3	87.6	143	209	253	328	463	542	592	669	809	1130	1260	1510	1590
MB460P	461	58.2	92.2	151	220	266	345	488	571	624	704	852	1190	1330	1590	1680
MB505P	505	63.8	101	165	241	291	378	534	625	683	771	933	1300	1450	1740	1840
MB555P	555	70.1	111	181	265	320	415	587	687	751	847	1030	1430	1600	1910	2020
MB625P	625	78.9	125	204	299	360	468	661	774	845	954	1160	1610	1800	2160	2270
MB690P	690	87.1	138	226	330	398	516	730	854	933	1050	1280	1780	1990	2380	2510
MB740P	740	93.4	148	242	354	427	554	783	916	1000	1130	1370	1900	2130	2550	2690
MB830P	830	105	166	271	397	479	621	878	1030	1120	1270	1530	2140	2390	2860	3020
MB920P	920	116	184	301	440	530	688	973	1140	1240	1410	1700	2370	2650	3170	3350
MB965P	965	122	193	316	461	556	722	1020	1200	1310	1470	1780	2480	2780	3330	3510
MB1040P	1040	131	208	340	497	600	778	1100	1290	1410	1590	1920	2680	2990	3590	3780
MB1150P	1150	145	230	376	550	663	860	1220	1420	1560	1760	2130	2960	3310	3970	4180
MB1220P	1220	154	244	399	583	703	913	1290	1510	1650	1860	2260	3140	3510	4210	4440
MB1390P	1390	176	278	455	664	801	1040	1470	1720	1880	2120	2570	3580	4000	4790	5060

M RANGE Cell performance

Available amperes at 20 ± 5 °C
Discharge current is for fully charged cells after prolonged float charge

Final voltage: 1.05 Volts per cell

Cell type	C_5 Ah	HOURS				MINUTES								SECONDS		
		8 h	5 h	3 h	2 h	90 min	60 min	30 min	20 min	15 min	10 min	5 min	1 min	30 s	5 s	1 s
MC9P	9	1.13	1.78	2.90	3.76	4.50	5.76	7.51	8.61	9.58	11.0	13.4	19.9	22.8	28.1	30.4
MC14P	14	1.75	2.77	4.51	5.85	7.00	8.95	11.7	13.4	14.9	17.1	20.9	30.9	35.5	43.8	47.3
MC22P	22	2.75	4.36	7.08	9.23	11.1	14.2	18.7	21.2	23.6	26.9	32.2	45.3	51.4	61.1	65.7
MC31P	31	3.88	6.14	10.0	13.0	15.6	20.1	26.4	29.9	33.2	37.9	45.3	63.9	72.4	86.1	92.6
MC39P	39	4.88	7.72	12.6	16.4	19.6	25.3	33.2	37.7	41.8	47.7	57.0	80.4	91.1	108	117
MC47P	47	5.88	9.31	15.1	19.7	23.7	30.4	40.0	45.4	50.4	57.5	68.7	96.8	110	131	140
MC55P	55	6.88	10.9	17.7	23.1	27.7	35.6	46.8	53.1	59.0	67.3	80.4	113	129	153	164
MC70P	70	8.75	13.9	22.6	29.5	35.7	47.0	63.3	71.8	79.3	91.6	110	155	176	212	227
MC90P	90	11.3	17.8	29.1	37.9	45.9	60.5	81.4	92.3	102	118	141	199	226	272	292
MC110P	110	13.8	21.8	35.5	46.3	56.1	73.9	99.5	113	125	144	173	243	276	333	357
MC130P	130	16.3	25.7	42.0	54.7	66.3	87.4	118	133	147	170	204	288	326	393	422
MC145P	145	18.1	28.7	46.8	61.1	73.9	97.5	131	149	164	190	228	321	364	439	471
MC165P	165	20.6	32.7	53.3	69.5	84.1	111	149	169	187	216	259	365	414	499	536
MC185P	185	23.1	36.6	59.8	77.9	94.3	124	167	190	210	242	290	409	464	559	601
MC215P	215	26.9	42.6	69.4	90.5	110	145	193	219	242	275	326	452	509	597	645
MC240P	240	30.0	47.5	77.5	101	122	161	215	244	270	306	364	504	568	667	720
MC285P	285	35.6	56.4	92.1	120	145	192	256	290	320	364	432	599	674	792	855
MC310P	310	38.8	61.4	100	131	158	208	278	316	349	396	470	651	733	861	930
MC335P	335	41.9	66.3	108	141	171	225	300	341	377	428	508	704	793	931	1010
MB370P	369	46.1	73.1	119	155	188	248	331	376	415	471	559	775	873	1030	1110
MB390P	392	49.0	77.6	127	165	200	263	352	399	441	501	594	824	927	1090	1180
MB415P	415	51.9	82.2	134	175	212	279	372	423	467	530	629	872	982	1150	1250
MB440P	438	54.8	86.7	141	184	223	294	393	446	492	559	664	920	1040	1220	1310
MB460P	461	57.6	91.3	149	194	235	310	414	469	518	589	698	968	1090	1280	1380
MB505P	505	63.1	100	163	213	257	339	453	514	568	645	765	1060	1200	1400	1520
MB555P	555	69.4	110	179	234	283	373	498	565	624	709	841	1170	1310	1540	1670
MB625P	625	78.1	124	202	263	319	420	561	636	703	798	947	1310	1480	1740	1880
MB690P	690	86.3	137	223	291	352	464	619	703	776	881	1050	1450	1630	1920	2070
MB740P	740	92.5	147	239	312	377	497	664	754	832	945	1120	1560	1750	2060	2220
MB830P	830	104	164	268	350	423	558	745	845	933	1060	1260	1740	1960	2310	2490
MB920P	920	115	182	297	387	469	618	825	937	1030	1180	1390	1930	2180	2560	2760
MB965P	965	121	191	312	406	492	649	866	983	1090	1230	1460	2030	2280	2680	2900
MB1040P	1040	130	206	336	438	530	699	933	1060	1170	1330	1580	2190	2460	2890	3120
MB1150P	1150	144	228	371	484	586	773	1030	1170	1290	1470	1740	2420	2720	3190	3450
MB1220P	1220	153	242	394	514	622	820	1090	1240	1370	1560	1840	2560	2890	3390	3660
MB1390P	1390	174	275	449	585	709	934	1250	1420	1560	1780	2110	2920	3290	3860	4170

Cell performance M RANGE

Available amperes at 20 ± 5 °C
Discharge current is for fully charged cells after prolonged float charge

Final voltage: 1.10 Volts per cell

Cell type	C_5 Ah	HOURS				MINUTES								SECONDS		
		8 h	5 h	3 h	2 h	90 min	60 min	30 min	20 min	15 min	10 min	5 min	1 min	30 s	5 s	1 s
MC9P	9	1.10	1.75	2.61	3.33	3.95	4.78	6.20	7.16	7.85	8.95	11.0	16.2	18.5	22.7	23.9
MC14P	14	1.72	2.72	4.06	5.19	6.14	7.44	9.64	11.1	12.2	13.9	17.1	25.2	28.7	35.2	37.2
MC22P	22	2.70	4.27	6.38	8.19	9.71	11.9	15.3	17.7	19.2	21.5	26.1	37.0	41.4	49.3	52.2
MC31P	31	3.80	6.02	9.00	11.5	13.7	16.7	21.6	24.9	27.0	30.4	36.7	52.2	58.4	69.4	73.6
MC39P	39	4.78	7.57	11.3	14.5	17.2	21.0	27.1	31.3	34.0	38.2	46.2	65.6	73.4	87.4	92.6
MC47P	47	5.76	9.13	13.6	17.5	20.8	25.3	32.7	37.7	41.0	46.0	55.7	79.1	88.5	105	112
MC55P	55	6.74	10.7	16.0	20.5	24.3	29.6	38.3	44.2	47.9	53.9	65.2	92.5	104	123	131
MC70P	70	8.58	13.6	20.4	26.3	31.6	39.3	51.3	59.8	65.0	73.1	88.4	125	142	168	184
MC90P	90	11.0	17.5	26.2	33.8	40.6	50.6	65.9	76.8	83.6	94.0	114	161	182	216	237
MC110P	110	13.5	21.4	32.0	41.3	49.6	61.8	80.6	93.9	102	115	139	197	223	264	289
MC130P	130	15.9	25.2	37.8	48.8	58.7	73.1	95.2	111	121	136	164	232	263	312	342
MC145P	145	17.8	28.2	42.2	54.4	65.4	81.5	106	124	135	151	183	259	293	348	381
MC165P	165	20.2	32.0	48.0	62.0	74.5	92.7	121	141	153	172	208	295	334	396	434
MC185P	185	22.7	35.9	53.9	69.5	83.5	104	136	158	172	193	234	331	374	444	486
MC215P	215	26.3	41.7	62.6	80.7	97.0	121	156	180	195	220	263	366	409	483	511
MC240P	240	29.4	46.6	69.9	90.1	108	135	174	201	218	245	293	409	457	539	570
MC285P	285	34.9	55.3	83.0	107	129	160	207	239	259	291	348	486	542	640	677
MC310P	310	38.0	60.2	90.2	116	140	174	225	260	281	317	379	528	590	697	736
MC335P	335	41.1	65.0	97.5	126	151	188	243	281	304	343	409	571	637	753	795
MB370P	369	45.2	71.7	107	139	166	207	268	310	335	377	451	629	702	829	876
MB390P	392	48.0	76.1	114	147	177	220	284	329	356	401	479	668	746	881	931
MB415P	415	50.9	80.6	121	156	187	233	301	348	376	424	507	707	790	932	985
MB440P	438	53.7	85.0	127	164	198	246	318	368	397	448	535	746	833	984	1040
MB460P	461	56.5	89.5	134	173	208	259	334	387	418	471	563	786	877	1040	1100
MB505P	505	61.9	98.1	147	190	228	284	366	424	458	516	617	861	961	1140	1200
MB555P	555	68.0	108	162	208	250	312	402	466	503	567	678	946	1060	1250	1320
MB625P	625	76.6	121	182	235	282	351	453	525	567	639	763	1070	1190	1400	1480
MB690P	690	84.6	134	201	259	311	388	500	579	626	705	843	1180	1310	1550	1640
MB740P	740	90.7	144	215	278	334	416	537	621	671	757	904	1260	1410	1660	1760
MB830P	830	102	161	242	312	375	466	602	697	753	849	1010	1410	1580	1870	1970
MB920P	920	113	179	268	345	415	517	667	772	835	941	1120	1570	1750	2070	2190
MB965P	965	118	187	281	362	435	542	700	810	875	987	1180	1650	1840	2170	2290
MB1040P	1040	127	202	303	391	469	585	754	873	943	1060	1270	1770	1980	2340	2470
MB1150P	1150	141	223	335	432	519	646	834	965	1040	1180	1400	1960	2190	2580	2730
MB1220P	1220	150	237	355	458	550	686	885	1020	1110	1250	1490	2080	2320	2740	2900
MB1390P	1390	170	270	405	522	627	781	1010	1170	1260	1420	1700	2370	2650	3120	3300

M RANGE Cell performance

Available amperes at 20 ± 5° C
Discharge current is for fully charged cells after prolonged float charge

Final voltage: 1.14 Volts per cell

Cell type	C_5 Ah	HOURS				MINUTES								SECONDS		
		8 h	5 h	3 h	2 h	90 min	60 min	30 min	20 min	15 min	10 min	5 min	1 min	30 s	5 s	1 s
MC9P	9	1.06	1.68	2.28	2.85	3.32	3.89	4.97	5.75	6.33	7.24	8.87	13.2	15.0	17.8	19.8
MC14P	14	1.65	2.62	3.55	4.43	5.16	6.05	7.73	8.95	9.85	11.3	13.8	20.5	23.3	27.8	30.8
MC22P	22	2.59	4.11	5.59	7.01	8.25	9.50	12.3	14.1	15.3	17.5	21.1	29.8	33.4	38.9	40.3
MC31P	31	3.66	5.79	7.88	9.88	11.6	13.4	17.3	19.8	21.6	24.7	29.7	42.0	47.1	54.8	56.7
MC39P	39	4.60	7.29	9.91	12.4	14.6	16.8	21.8	24.9	27.2	31.1	37.4	52.8	59.3	68.9	71.4
MC47P	47	5.54	8.79	11.9	15.0	17.6	20.3	26.3	30.0	32.7	37.5	45.1	63.6	71.4	83.1	86.0
MC55P	55	6.49	10.3	14.0	17.5	20.6	23.8	30.7	35.2	38.3	43.9	52.7	74.4	83.6	97.2	101
MC70P	70	8.25	13.1	17.9	22.7	27.0	31.8	41.1	47.1	52.1	59.1	71.3	102	114	134	139
MC90P	90	10.6	16.8	23.0	29.2	34.8	40.8	52.8	60.6	66.9	75.9	91.6	131	147	172	179
MC110P	110	13.0	20.6	28.1	35.7	42.5	49.9	64.5	74.1	81.8	92.8	112	161	180	210	219
MC130P	130	15.3	24.3	33.2	42.1	50.2	59.0	76.3	87.5	96.7	110	132	190	212	248	258
MC145P	145	17.1	27.1	37.0	47.0	56.0	65.8	85.1	97.6	108	122	148	212	237	277	288
MC165P	165	19.5	30.8	42.1	53.5	63.7	74.9	96.8	111	123	139	168	241	270	315	328
MC185P	185	21.8	34.6	47.2	60.0	71.4	83.9	109	125	138	156	188	270	302	353	368
MC215P	215	25.4	40.2	54.8	69.5	82.9	97.5	125	143	156	177	212	297	330	380	394
MC240P	240	28.3	44.9	61.2	77.6	92.5	109	139	160	174	198	236	332	368	424	439
MC285P	285	33.6	53.3	72.7	92.2	110	129	165	190	206	235	281	394	437	504	522
MC310P	310	36.6	57.9	79.1	100	120	141	180	207	224	255	305	428	476	548	567
MC335P	335	39.5	62.6	85.4	108	129	152	194	223	242	276	330	463	514	592	613
MB370P	369	43.5	69.0	94.1	119	142	167	214	246	267	304	364	510	566	652	675
MB390P	392	46.2	73.3	100	127	151	178	227	261	284	323	386	542	601	693	718
MB415P	415	48.9	77.6	106	134	160	188	241	277	300	342	409	573	637	734	760
MB440P	438	51.7	81.9	112	142	169	199	254	292	317	361	432	605	672	774	802
MB460P	461	54.4	86.2	118	149	178	209	267	307	334	380	454	637	707	815	844
MB505P	505	59.6	94.4	129	163	195	229	293	337	365	416	498	698	775	893	924
MB555P	555	65.4	104	142	179	214	252	322	370	402	457	547	767	852	981	1020
MB625P	625	73.7	117	159	202	241	284	362	417	452	515	616	863	959	1110	1140
MB690P	690	81.4	129	176	223	266	313	400	460	499	569	680	953	1060	1220	1260
MB740P	740	87.3	138	189	239	285	336	429	493	535	610	729	1020	1140	1310	1360
MB830P	830	97.9	155	212	268	320	377	481	553	601	684	818	1150	1270	1470	1520
MB920P	920	108	172	235	298	355	417	533	613	666	758	906	1270	1410	1630	1680
MB965P	965	114	180	246	312	372	438	559	643	698	795	951	1330	1480	1710	1770
MB1040P	1040	123	194	265	336	401	472	603	693	753	857	1030	1440	1600	1840	1900
MB1150P	1150	136	215	293	372	443	522	667	766	832	948	1130	1590	1760	2030	2110
MB1220P	1220	144	228	311	395	470	553	707	813	883	1010	1200	1690	1870	2160	2230
MB1390P	1390	164	260	354	450	536	631	806	926	1010	1150	1370	1920	2130	2460	2550

Cell dimensions and internal resistance

H RANGE

H type cells are normally supplied as single cells, taped together into blocks or assembled in steel crates.

Cell type	Capacity at the 5hr rate	Volume of liquid electrolyte above plates	Weight per cell		Overall height H		Width per cell W*		Length per cell L		Max no of cells as taped block	Internal resistance	Electrolyte height between Min - Max
	(Ah)	(cc)	(kg)	(lbs)	(mm)	(ins)	(mm)	(ins)	(mm)	(ins)	▲	(mOhm)	(mm)
HC9P	9	143	1.75	3.9	275	10.83	121	4.76	42	1.65	5	3.33	35
HC12P	12	140	1.91	4.2	275	10.83	121	4.76	42	1.65	5	2.50	35
HC17P	17	138	2.06	4.5	275	10.83	121	4.76	42	1.65	5	1.76	35
HC21P	21	232	3.01	6.6	275	10.83	121	4.76	66	2.60	5	1.43	35
HC25P	25	230	3.15	6.9	275	10.83	121	4.76	66	2.60	5	1.20	35
HC29P	29	227	3.32	7.3	275	10.83	121	4.76	66	2.60	5	1.03	35
HC34P	34	224	3.46	7.6	275	10.83	121	4.76	66	2.60	5	0.88	35
HC40P	40	546	6.21	13.7	358	14.09	192	7.56	68	2.68	3	0.98	50
HC50P	50	539	6.57	14.5	358	14.09	192	7.56	68	2.68	2	0.78	50
HC60P	60	532	7.00	15.4	358	14.09	192	7.56	68	2.68	2	0.65	50
HC70P	70	525	7.35	16.2	358	14.09	192	7.56	68	2.68	2	0.56	50
HC80P	80	518	7.71	17.0	358	14.09	192	7.56	68	2.68	2	0.49	50
HC90P	90	744	9.80	21.6	358	14.09	192	7.56	93	3.66	-	0.43	50
HC100P	100	737	10.1	22.2	358	14.09	192	7.56	93	3.66	-	0.39	50
HC110P	110	731	10.5	23.1	358	14.09	192	7.56	93	3.66	-	0.35	50
HC120P	120	724	10.8	23.8	358	14.09	192	7.56	93	3.66	-	0.33	50
HC130P	130	737	12.0	26.4	414	16.30	192	7.56	93	3.66	-	0.33	50
HC145P	145	731	12.4	27.3	414	16.30	192	7.56	93	3.66	-	0.30	50
HC155P	155	724	12.8	28.2	414	16.30	192	7.56	93	3.66	-	0.28	50
HC185P	185	976	16.4	36.1	414	16.30	192	7.56	122	4.80	-	0.23	50
HC210P	210	962	17.2	37.8	414	16.30	192	7.56	122	4.80	-	0.20	50
HB230P	230	1200	20.0	44.0	405	15.94	195	7.68	159	6.26	-	0.19	50
HB255P	256	1200	21.0	46.2	405	15.94	195	7.68	159	6.26	-	0.17	50
HB280P	281	1400	23.5	51.7	405	15.94	195	7.68	183	7.20	-	0.15	50
HB305P	307	1400	24.5	53.9	405	15.94	195	7.68	183	7.20	-	0.14	50
HB345P	345	1800	29.5	64.9	405	15.94	195	7.68	232	9.13	-	0.12	50
HB385P	383	1700	31.0	68.2	405	15.94	195	7.68	232	9.13	-	0.11	50
HB420P	422	2100	34.5	75.9	405	15.94	195	7.68	268	10.55	-	0.10	50
HB460P	460	2100	36.0	79.2	405	15.94	195	7.68	268	10.55	-	0.09	50
HB510P	510	2300	42.0	92.4	405	15.94	195	7.68	304	11.97	-	0.08	50
HB560P	560	2800	46.0	101.2	405	15.94	195	7.68	352	13.86	-	0.08	50
HB615P	615	2800	48.0	105.6	405	15.94	195	7.68	362	14.25	-	0.07	50
HB640P	640	2900	52.5	115.5	405	15.94	195	7.68	377	14.84	-	0.07	50
HB705P	705	3500	57.5	126.5	405	15.94	195	7.68	437	17.20	-	0.06	50
HB765P	765	3500	60.0	132.0	405	15.94	195	7.68	437	17.20	-	0.06	50
HB865P	865	4000	68.5	150.7	405	15.94	195	7.68	497	19.57	-	0.05	50
HB920P	920	4200	72.0	158.4	405	15.94	195	7.68	522	20.55	-	0.05	50

▲ Taped block length = cell length x no. of cells + 2 mm/0.1 in.

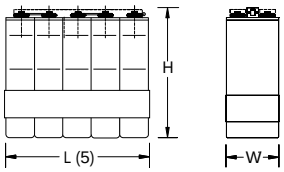

HC9P - HC210P
*add 2 mm/0.1 in. to the width when calculating taped cell blocks.

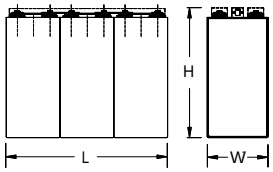

HB230P - HB920P

Cell connection bolt per pole:

HC 9P to HC 34P:	M6	HB 230P to HB 305P:	2 x M10
HC 40P & HC 50P:	M8	HB 345P to HB 460P:	3 x M10
HC 60P to HC 155P:	M10	HB 510P to HB 615P:	4 x M10
HC 185P & HC 210P:	2 x M10	HB640P to HB 765P:	5 x M10
		HB 865P & HB 920P:	6 x M10

H RANGE Cell performance

Available amperes at 20 ± 5 °C
Discharge current is for fully charged cells after prolonged float charge

Final voltage: 1.00 Volt per cell

Cell type	C_5 Ah	HOURS				MINUTES								SECONDS		
		8 h	5 h	3 h	2 h	90 min	60 min	30 min	20 min	15 min	10 min	5 min	1 min	30 s	5 s	1 s
HC9P	9	1.14	1.80	2.96	4.39	5.78	8.46	15.4	20.4	23.0	26.2	31.6	46.7	52.9	66.3	70.7
HC12P	12	1.52	2.40	3.95	5.86	7.70	11.3	20.5	27.2	30.7	35.0	42.1	62.2	70.5	88.4	94.2
HC17P	17	2.15	3.40	5.59	8.30	10.9	16.0	29.1	38.5	43.5	49.6	59.6	88.1	99.9	125	133
HC21P	21	2.65	4.20	6.91	10.2	13.5	19.7	35.9	47.6	53.7	61.2	73.6	109	123	155	165
HC25P	25	3.16	5.00	8.22	12.2	16.0	23.5	42.7	56.7	64.0	72.9	87.6	130	147	184	196
HC29P	29	3.66	5.80	9.54	14.2	18.6	27.3	49.6	65.8	74.2	84.5	102	150	170	214	228
HC34P	34	4.29	6.80	11.2	16.6	21.8	32.0	58.1	77.1	87.0	99.1	119	176	200	251	267
HC40P	40	5.05	8.00	13.2	19.5	25.7	37.6	68.4	92.8	105	120	145	206	237	297	326
HC50P	50	6.31	10.0	16.4	24.4	32.1	47.0	85.5	116	132	150	181	258	296	372	408
HC60P	60	7.58	12.0	19.7	29.3	38.5	56.4	103	139	158	180	217	309	355	446	489
HC70P	70	8.84	14.0	23.0	34.2	44.9	65.8	120	162	185	210	253	361	414	520	571
HC80P	80	10.1	16.0	26.3	39.0	51.3	75.2	137	186	211	240	290	412	473	595	652
HC90P	90	11.4	18.0	29.6	43.9	57.8	84.6	154	209	237	270	326	464	532	669	734
HC100P	100	12.6	20.0	32.9	48.8	64.2	94.0	171	232	264	300	362	515	592	743	816
HC110P	110	13.9	22.0	36.2	53.7	70.6	103	188	255	290	330	398	567	651	818	897
HC120P	120	15.2	24.0	39.5	58.6	77.0	113	205	278	316	360	435	618	710	892	979
HC130P	130	16.4	26.0	42.8	63.4	83.4	122	222	297	334	377	445	613	696	847	895
HC145P	145	18.3	29.0	47.7	70.8	93.1	136	248	332	373	420	496	684	776	944	998
HC155P	155	19.6	31.0	51.0	75.6	99.5	146	265	355	399	449	531	731	829	1010	1070
HC185P	185	23.4	37.0	60.9	90.3	119	174	316	423	476	536	633	873	990	1210	1270
HC210P	210	26.5	42.0	69.1	102	135	197	359	481	540	608	719	991	1120	1370	1450
HB230P	230	29.0	46.0	75.7	112	148	216	393	526	592	666	788	1090	1230	1500	1580
HB255P	255	32.2	51.0	83.9	124	164	240	436	584	656	739	873	1200	1360	1660	1760
HB280P	280	35.4	56.0	92.1	137	180	263	479	641	720	811	959	1320	1500	1820	1930
HB305P	305	38.5	61.0	100	149	196	287	521	698	785	884	1040	1440	1630	1990	2100
HB345P	345	43.6	69.0	113	168	221	324	590	789	888	1000	1180	1630	1850	2250	2380
HB385P	385	48.6	77.0	127	188	247	362	658	881	991	1120	1320	1820	2060	2510	2650
HB420P	420	53.0	84.0	138	205	270	395	718	961	1080	1220	1440	1980	2250	2740	2890
HB460P	460	58.1	92.0	151	224	295	432	786	1050	1180	1340	1580	2170	2460	3000	3170
HB510P	510	64.4	102	168	249	327	479	872	1160	1310	1480	1750	2410	2730	3320	3510
HB560P	560	70.7	112	184	273	360	526	957	1280	1440	1620	1920	2640	3000	3650	3860
HB615P	615	77.7	123	202	300	395	578	1050	1410	1580	1780	2110	2900	3290	4010	4230
HB640P	640	80.8	128	211	312	411	602	1090	1470	1650	1850	2190	3020	3420	4170	4410
HB705P	705	89.0	141	232	344	453	663	1210	1610	1810	2040	2410	3330	3770	4590	4850
HB765P	765	96.6	153	252	373	491	719	1310	1750	1970	2220	2620	3610	4090	4980	5270
HB865P	865	109	173	285	422	555	813	1480	1980	2230	2510	2960	4080	4630	5630	5960
HB920P	920	116	184	303	449	591	865	1570	2110	2370	2670	3150	4340	4920	5990	6330

Cell performance H RANGE

Available amperes at 20 ± 5 °C
Discharge current is for fully charged cells after prolonged float charge

Final voltage: 1.05 Volts per cell

Cell type	C_5 Ah	HOURS				MINUTES								SECONDS		
		8 h	5 h	3 h	2 h	90 min	60 min	30 min	20 min	15 min	10 min	5 min	1 min	30 s	5 s	1 s
HC9P	9	1.13	1.78	2.92	4.31	5.65	8.19	14.5	17.4	19.2	21.7	25.8	38.6	45.0	55.2	59.8
HC12P	12	1.50	2.38	3.89	5.75	7.54	10.9	19.3	23.3	25.6	28.9	34.5	51.4	60.0	73.6	79.7
HC17P	17	2.13	3.37	5.51	8.14	10.7	15.5	27.4	33.0	36.3	41.0	48.8	72.9	85.0	104	113
HC21P	21	2.63	4.16	6.80	10.1	13.2	19.1	33.8	40.7	44.8	50.6	60.3	90.0	105	129	139
HC25P	25	3.13	4.95	8.10	12.0	15.7	22.8	40.3	48.5	53.4	60.3	71.8	107	125	153	166
HC29P	29	3.63	5.74	9.40	13.9	18.2	26.4	46.7	56.2	61.9	69.9	83.3	124	145	178	193
HC34P	34	4.25	6.73	11.0	16.3	21.4	30.9	54.8	65.9	72.6	82.0	97.6	146	170	209	226
HC40P	40	5.00	7.92	13.0	19.2	25.1	36.4	65.3	80.2	88.0	99.7	118	175	200	245	266
HC50P	50	6.25	9.90	16.2	24.0	31.4	45.5	81.6	100	110	125	147	219	250	307	332
HC60P	60	7.50	11.9	19.4	28.7	37.7	54.6	97.9	120	132	150	177	263	300	368	398
HC70P	70	8.75	13.9	22.7	33.5	44.0	63.7	114	140	154	175	206	306	350	430	465
HC80P	80	10.0	15.8	25.9	38.3	50.2	72.8	131	160	176	199	235	350	400	491	531
HC90P	90	11.3	17.8	29.2	43.1	56.5	81.9	147	180	198	224	265	394	450	552	598
HC100P	100	12.5	19.8	32.4	47.9	62.8	91.0	163	200	220	249	294	438	500	614	664
HC110P	110	13.8	21.8	35.6	52.7	69.1	100	179	220	242	274	324	482	550	675	730
HC120P	120	15.0	23.8	38.9	57.5	75.4	109	196	241	264	299	353	525	600	736	797
HC130P	130	16.3	25.7	42.1	62.3	81.6	118	211	255	277	311	362	516	582	702	731
HC145P	145	18.1	28.7	47.0	69.5	91.1	132	235	284	310	347	404	576	649	783	816
HC155P	155	19.4	30.7	50.2	74.2	97.3	141	251	304	331	371	432	615	694	837	872
HC185P	185	23.1	36.6	59.9	88.6	116	168	300	362	395	442	515	735	828	999	1040
HC210P	210	26.3	41.6	68.0	101	132	191	340	411	448	502	585	834	940	1130	1180
HB230P	230	28.8	45.5	74.5	110	144	209	373	451	491	550	641	913	1030	1240	1290
HB255P	255	31.9	50.5	82.6	122	160	232	413	499	544	610	710	1010	1140	1380	1430
HB280P	280	35.0	55.4	90.7	134	176	255	454	548	598	670	780	1110	1250	1510	1580
HB305P	305	38.1	60.4	98.8	146	192	278	494	597	651	729	849	1210	1370	1650	1720
HB345P	345	43.1	68.3	112	165	217	314	559	676	736	825	961	1370	1540	1860	1940
HB385P	385	48.1	76.2	125	184	242	350	624	754	822	921	1070	1530	1720	2080	2170
HB420P	420	52.5	83.2	136	201	264	382	680	823	897	1000	1170	1670	1880	2270	2360
HB460P	460	57.5	91.1	149	220	289	419	745	901	982	1100	1280	1830	2060	2480	2590
HB510P	510	63.8	101	165	244	320	464	826	999	1090	1220	1420	2030	2280	2750	2870
HB560P	560	70.0	111	181	268	352	510	907	1100	1200	1340	1560	2220	2510	3020	3150
HB615P	615	76.9	122	199	295	386	560	996	1210	1310	1470	1710	2440	2750	3320	3460
HB640P	640	80.0	127	207	307	402	582	1040	1250	1370	1530	1780	2540	2860	3460	3600
HB705P	705	88.1	140	228	338	443	642	1140	1380	1510	1690	1960	2800	3160	3810	3970
HB765P	765	95.6	151	248	366	480	696	1240	1500	1630	1830	2130	3040	3420	4130	4300
HB865P	865	108	171	280	414	543	787	1400	1690	1850	2070	2410	3440	3870	4670	4870
HB920P	920	115	182	298	441	578	837	1490	1800	1960	2200	2560	3650	4120	4970	5180

H RANGE Cell performance

Available amperes at 20 ± 5 °C
Discharge current is for fully charged cells after prolonged float charge

Final voltage: 1.10 Volts per cell

Cell type	C_5 Ah	HOURS				MINUTES								SECONDS		
		8 h	5 h	3 h	2 h	90 min	60 min	30 min	20 min	15 min	10 min	5 min	1 min	30 s	5 s	1 s
HC9P	9	1.10	1.75	2.83	4.17	5.45	7.75	11.7	13.5	15.0	16.8	20.1	30.7	35.6	45.0	47.2
HC12P	12	1.47	2.33	3.78	5.56	7.26	10.3	15.6	18.0	20.0	22.3	26.9	40.9	47.5	60.0	62.9
HC17P	17	2.08	3.30	5.36	7.87	10.3	14.6	22.1	25.5	28.3	31.7	38.1	57.9	67.3	85.0	89.1
HC21P	21	2.57	4.08	6.62	9.72	12.7	18.1	27.2	31.4	35.0	39.1	47.0	71.6	83.1	105	110
HC25P	25	3.06	4.85	7.88	11.6	15.1	21.5	32.4	37.4	41.7	46.6	56.0	85.2	99.0	125	131
HC29P	29	3.55	5.63	9.14	13.4	17.5	25.0	37.6	43.4	48.3	54.0	64.9	98.8	115	145	152
HC34P	34	4.17	6.60	10.7	15.7	20.6	29.3	44.1	50.9	56.7	63.3	76.1	116	135	170	178
HC40P	40	4.90	7.77	12.6	18.5	24.2	34.5	53.3	61.6	68.7	76.4	91.4	138	160	196	208
HC50P	50	6.13	9.71	15.8	23.2	30.3	43.1	66.7	77.0	85.9	95.5	114	173	200	245	260
HC60P	60	7.35	11.7	18.9	27.8	36.3	51.7	80.0	92.4	103	115	137	207	240	294	312
HC70P	70	8.58	13.6	22.1	32.4	42.4	60.3	93.3	108	120	134	160	242	280	343	364
HC80P	80	9.80	15.5	25.2	37.0	48.4	68.9	107	123	137	153	183	276	320	392	416
HC90P	90	11.0	17.5	28.4	41.7	54.5	77.5	120	139	155	172	206	311	360	441	468
HC100P	100	12.3	19.4	31.5	46.3	60.5	86.1	133	154	172	191	228	345	400	490	521
HC110P	110	13.5	21.4	34.7	50.9	66.6	94.7	147	169	189	210	251	380	440	539	573
HC120P	120	14.7	23.3	37.8	55.6	72.6	103	160	185	206	229	274	415	480	588	625
HC130P	130	15.9	25.2	41.0	60.2	78.7	112	170	195	215	238	278	412	468	558	585
HC145P	145	17.8	28.2	45.7	67.1	87.7	125	189	217	240	266	310	459	522	623	652
HC155P	155	19.0	30.1	48.8	71.8	93.8	134	203	232	257	284	332	491	558	666	697
HC185P	185	22.7	35.9	58.3	85.7	112	159	242	277	307	339	396	586	666	794	832
HC210P	210	25.7	40.8	66.2	97.2	127	181	274	314	348	385	449	665	756	902	944
HB230P	230	28.2	44.7	72.5	106	139	198	301	344	381	421	492	728	828	988	1030
HB255P	255	31.3	49.5	80.3	118	154	220	333	382	423	467	545	808	918	1100	1150
HB280P	280	34.3	54.4	88.2	130	169	241	366	419	464	513	599	887	1010	1200	1260
HB305P	305	37.4	59.2	96.1	141	185	263	399	457	505	559	652	966	1100	1310	1370
HB345P	345	42.3	67.0	109	160	209	297	451	517	572	632	738	1090	1240	1480	1550
HB385P	385	47.2	74.8	121	178	233	332	503	577	638	706	823	1220	1390	1650	1730
HB420P	420	51.5	81.6	132	194	254	362	549	629	696	770	898	1330	1510	1800	1890
HB460P	460	56.4	89.3	145	213	278	396	601	689	762	843	984	1460	1660	1980	2070
HB510P	510	62.5	99.0	161	236	309	439	666	764	845	935	1090	1620	1840	2190	2290
HB560P	560	68.6	109	176	259	339	482	732	839	928	1030	1200	1770	2020	2410	2520
HB615P	615	75.4	119	194	285	372	530	804	921	1020	1130	1320	1950	2220	2640	2770
HB640P	640	78.4	124	202	296	387	551	836	958	1060	1170	1370	2030	2310	2750	2880
HB705P	705	86.4	137	222	326	427	607	921	1060	1170	1290	1510	2230	2540	3030	3170
HB765P	765	93.8	149	241	354	463	659	1000	1150	1270	1400	1640	2420	2760	3290	3440
HB865P	865	106	168	272	400	523	745	1130	1300	1430	1590	1850	2740	3120	3710	3890
HB920P	920	113	179	290	426	557	792	1200	1380	1520	1690	1970	2910	3310	3950	4140

Cell performance H RANGE

Available amperes at 20 ± 5 °C
Discharge current is for fully charged cells after prolonged float charge

Final voltage: 1.14 Volts per cell

Cell type	C_5 Ah	HOURS				MINUTES								SECONDS		
		8 h	5 h	3 h	2 h	90 min	60 min	30 min	20 min	15 min	10 min	5 min	1 min	30 s	5 s	1 s
HC9P	9	1.06	1.68	2.72	3.97	5.14	6.77	9.03	10.5	11.6	12.9	15.8	24.6	28.7	34.9	38.3
HC12P	12	1.42	2.24	3.62	5.29	6.85	9.02	12.0	14.0	15.5	17.2	21.1	32.8	38.2	46.6	51.0
HC17P	17	2.00	3.18	5.13	7.50	9.71	12.8	17.1	19.8	21.9	24.3	29.9	46.4	54.1	66.0	72.3
HC21P	21	2.48	3.93	6.34	9.26	12.0	15.8	21.1	24.5	27.1	30.1	36.9	57.3	66.9	81.5	89.3
HC25P	25	2.95	4.67	7.55	11.0	14.3	18.8	25.1	29.2	32.2	35.8	43.9	68.3	79.6	97.0	106
HC29P	29	3.42	5.42	8.76	12.8	16.6	21.8	29.1	33.8	37.4	41.5	50.9	79.2	92.3	113	123
HC34P	34	4.01	6.36	10.3	15.0	19.4	25.6	34.1	39.7	43.8	48.7	59.7	92.8	108	132	145
HC40P	40	4.72	7.48	12.1	17.7	22.9	30.4	41.2	47.9	52.8	58.5	71.5	111	129	160	168
HC50P	50	5.90	9.35	15.1	22.2	28.7	38.1	51.5	59.9	65.9	73.1	89.3	139	161	201	210
HC60P	60	7.08	11.2	18.1	26.6	34.4	45.7	61.7	71.9	79.1	87.7	107	166	193	241	252
HC70P	70	8.25	13.1	21.1	31.0	40.1	53.3	72.0	83.9	92.3	102	125	194	225	281	294
HC80P	80	9.43	15.0	24.2	35.4	45.8	60.9	82.3	95.9	106	117	143	222	257	321	336
HC90P	90	10.6	16.8	27.2	39.9	51.6	68.5	92.6	108	119	132	161	250	289	361	378
HC100P	100	11.8	18.7	30.2	44.3	57.3	76.1	103	120	132	146	179	277	321	401	420
HC110P	110	13.0	20.6	33.2	48.7	63.0	83.7	113	132	145	161	197	305	353	441	462
HC120P	120	14.2	22.4	36.2	53.2	68.8	91.3	123	144	158	175	214	333	386	481	504
HC130P	130	15.3	24.3	39.3	57.5	74.4	97.8	130	151	165	181	220	327	375	442	457
HC145P	145	17.1	27.1	43.8	64.1	83.0	109	146	168	184	202	245	365	418	493	510
HC155P	155	18.3	29.0	46.8	68.5	88.7	117	156	180	197	216	262	390	447	527	545
HC185P	185	21.8	34.6	55.9	81.8	106	139	186	214	235	258	313	466	534	628	650
HC210P	210	24.8	39.3	63.4	92.8	120	158	211	243	267	293	355	529	606	713	738
HB230P	230	27.1	43.0	69.5	102	132	173	231	267	293	321	389	579	664	781	808
HB255P	255	30.1	47.7	77.0	113	146	192	256	295	324	355	431	642	736	866	896
HB280P	280	33.0	52.3	84.6	124	160	211	281	324	356	390	473	705	808	951	984
HB305P	305	36.0	57.0	92.1	135	174	229	306	353	388	425	515	768	880	1040	1070
HB345P	345	40.7	64.5	104	153	197	259	346	400	439	481	583	869	996	1170	1210
HB385P	385	45.4	72.0	116	170	220	290	386	446	490	537	651	969	1110	1310	1350
HB420P	420	49.5	78.5	127	186	240	316	421	487	534	586	710	1060	1210	1430	1480
HB460P	460	54.2	86.0	139	203	263	346	462	533	585	641	777	1160	1330	1560	1620
HB510P	510	60.1	95.3	154	225	292	384	512	591	649	711	862	1280	1470	1730	1790
HB560P	560	66.0	105	169	248	320	421	562	649	712	781	946	1410	1620	1900	1970
HB615P	615	72.5	115	186	272	352	462	617	713	782	857	1040	1550	1780	2090	2160
HB640P	640	75.5	120	193	283	366	481	642	742	814	892	1080	1610	1850	2170	2250
HB705P	705	83.1	132	213	312	403	530	707	817	897	983	1190	1780	2040	2390	2480
HB765P	765	90.2	143	231	338	438	575	768	886	973	1070	1290	1930	2210	2600	2690
HB865P	865	102	162	261	382	495	650	868	1000	1100	1210	1460	2180	2500	2940	3040
HB920P	920	108	172	278	407	526	692	923	1070	1170	1280	1560	2320	2660	3130	3230

H RANGE Cell performance

Available amperes at 20 ± 5 °C
Discharge current is for fully charged cells

Final voltage: 0.65 Volt per cell

Cell type	C_5 Ah	SECONDS 90 s	60 s	30 s	15 s	5 s	1 s
HC9P	9	85.7	96.1	111	129	144	162
HC12P	12	114	128	147	172	191	216
HC17P	17	162	181	209	244	271	306
HC21P	21	200	224	258	301	335	378
HC25P	25	238	267	307	359	399	450
HC29P	29	276	309	356	416	463	522
HC34P	34	324	363	418	488	542	612
HC40P	40	393	439	502	580	646	719
HC50P	50	491	548	627	725	808	899
HC60P	60	589	658	753	870	969	1080
HC70P	70	687	768	878	1010	1130	1260
HC80P	80	785	877	1000	1160	1290	1440
HC90P	90	883	987	1130	1300	1450	1620
HC100P	100	981	1100	1260	1450	1620	1800
HC110P	110	1080	1210	1380	1590	1780	1980
HC120P	120	1180	1320	1510	1740	1940	2160
HC130P	130	1210	1340	1500	1720	1880	2040
HC145P	145	1350	1490	1680	1920	2100	2280
HC155P	155	1440	1600	1790	2050	2250	2430
HC185P	185	1720	1910	2140	2440	2680	2900
HC210P	210	1950	2160	2430	2770	3040	3300
HB230P	230	2140	2370	2660	3040	3330	3610
HB255P	255	2370	2630	2950	3370	3700	4000
HB280P	280	2600	2880	3240	3700	4060	4400
HB305P	305	2840	3140	3530	4030	4420	4790
HB345P	345	3210	3550	3990	4560	5000	5420
HB385P	385	3580	3970	4450	5090	5580	6040
HB420P	420	3910	4330	4860	5550	6090	6590
HB460P	460	4280	4740	5320	6080	6670	7220
HB510P	510	4740	5250	5900	6740	7390	8010
HB560P	560	5210	5770	6470	7400	8120	8790
HB615P	615	5720	6330	7110	8120	8910	9660
HB640P	640	5950	6590	7400	8450	9280	10050
HB705P	705	6560	7260	8150	9310	10220	11070
HB765P	765	7120	7880	8840	10110	11090	12010
HB865P	865	8050	8910	10000	11430	12540	13580
HB920P	920	8560	9480	10640	12150	13330	14440

Final voltage: 0.85 Volt per cell

Cell type	C_5 Ah	SECONDS 90 s	60 s	30 s	15 s	5 s	1 s
HC9P	9	66.5	74.0	84.1	98.7	110	121
HC12P	12	88.7	98.6	112	132	146	161
HC17P	17	126	140	159	186	207	228
HC21P	21	155	173	196	230	256	282
HC25P	25	185	205	234	274	305	335
HC29P	29	214	238	271	318	354	389
HC34P	34	251	279	318	373	415	456
HC40P	40	303	336	382	443	492	537
HC50P	50	379	419	477	554	615	671
HC60P	60	455	503	573	665	738	805
HC70P	70	531	587	668	776	861	940
HC80P	80	607	671	763	887	984	1070
HC90P	90	682	755	859	998	1110	1210
HC100P	100	758	839	954	1110	1230	1340
HC110P	110	834	923	1050	1220	1350	1480
HC120P	120	910	1010	1150	1330	1480	1610
HC130P	130	922	1010	1130	1280	1390	1510
HC145P	145	1030	1130	1260	1430	1550	1690
HC155P	155	1100	1200	1340	1530	1660	1800
HC185P	185	1310	1440	1610	1820	1980	2150
HC210P	210	1490	1630	1820	2070	2250	2440
HB230P	230	1630	1790	2000	2260	2460	2670
HB255P	255	1810	1980	2210	2510	2730	2970
HB280P	280	1990	2170	2430	2760	3000	3260
HB305P	305	2160	2370	2650	3000	3260	3550
HB345P	345	2450	2680	2990	3400	3690	4010
HB385P	385	2730	2990	3340	3790	4120	4480
HB420P	420	2980	3260	3640	4130	4490	4880
HB460P	460	3260	3570	3990	4530	4920	5350
HB510P	510	3620	3960	4420	5020	5460	5930
HB560P	560	3970	4350	4860	5510	5990	6510
HB615P	615	4360	4780	5330	6050	6580	7150
HB640P	640	4540	4970	5550	6300	6850	7440
HB705P	705	5000	5470	6110	6940	7540	8200
HB765P	765	5430	5940	6640	7530	8180	8900
HB865P	865	6140	6720	7500	8510	9250	10060
HB920P	920	6530	7140	7980	9060	9840	10700

Standard layouts

Alcad has developed a series of standard layouts by which a battery may be ordered. Whether the battery is being installed on a rack, in a cabinet or is simply free-standing, the same configuration principals can be applied.
There are two ways to configure the battery. The first is the normal method and is used on all LC..P, MC..P and HC..P cell types. The cell's length is used to calculate the row length, shown in figure 1. The second method is shown in figure 2. It is used on the majority of Alcad's LB..P, MB..P and HB..P cells, where the cell is turned through 90° and then connected width-to-width. This is referred to as 'crosswise' mounted and its purpose is to minimize the installation's overall length.

figure 1. Normal connection

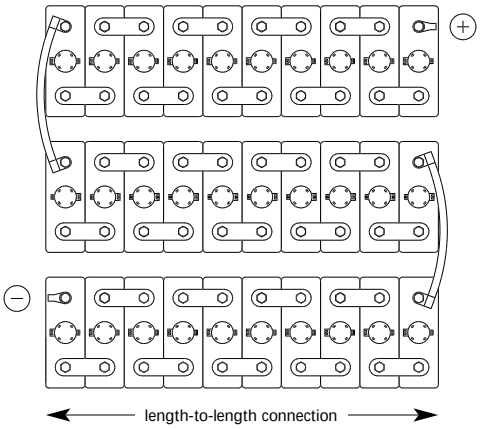

figure 2. Crosswise connection

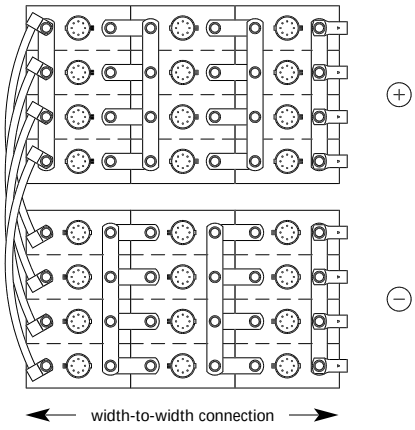

Table 1 demonstates the connection method for Alcad's extended range of cells. All other designations utilize the normal method of connection (length-to-length).

Table 1

Connection type	LB..P	MB..P	HB..P
Normal	LB385P to LB470P	MB370P to MB390P	-
Crosswise	LB510P to LB1540P	MB415P to MB1390P	HB230P to HB920P

Battery layout

Assembly method

Whatever your installation, use these simple guidelines when calculating your preferred configuration.

1. From the data in this publication, define the total number of cells in the battery.

2. Divide the length of the available installation area by the cell length (normal mount) or width (crosswise mount). This gives the maximum number of cells per row.

3. Divide the width (depth) of the available area by the cell width (normal mount) or length (crosswise-mount). This will give the maximum number of rows.

For example

If we consider a cabinet with three shelves : each shelf has a length of 440 mm and a width 380 mm. The battery comprises of ninety cells type LC30P, (figure 3).

figure 3.

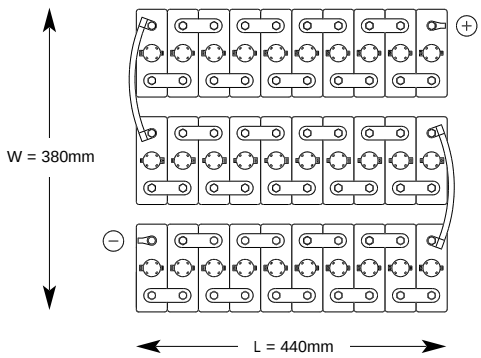

The LC30P has length of 42 mm and width 121 mm.

$\frac{440}{42}$ = 10 cells per row

$\frac{380}{121}$ = 3 rows per shelf

A total of 30 cells can therefore be fitted on each shelf.

Whilst this is an ideal example, the calculation formula can be applied to all rack, cabinet and free-standing installations.
For engineering assistance on complex layouts, please contact the company or its agent.

When ordering a battery rack, please specify the battery type and the preferred rack configuration (see pages 23-25). If your battery is being assembled in a cabinet, or is free-standing, please specify the number of rows, cells per row and total number of cells. This will ensure that all necessary inter-row and inter-tier flexible connectors are provided.

Battery racks

Alcad's product portfolio includes standard and anti-seismic battery racks (conforming to Uniform Building Code, Seismic Zone 4). These have been designed for all cell types in the Alcad range and are supplied unassembled to allow for easy installation. The purpose-built racks are strong, adaptable and provide good alkali protection.

Dimensions are given below for the range of rack layouts. Rack lengths are available in increments of 150 mm from 600 mm to a maximum of 6,000 mm. Calculate the required length using the cell length on page 5, 10, or 15 for normal connection, and by using the cell width 195 mm for crosswise connection.

1. Dimensions for single tier, standard floor mounted racks : single cell range

Cell type			1 tier rack					
			Depth (mm) No. of steps			Height (mm) No. of steps		
LC..P	MC..P	HC..P	2	3	4	2	3	4
10 to 59	9 to 55	9 to 34	430	645	860	560	660	760
70 to 205	70 to 185	40 to120	430	645	860	658	758	858
220 to 355	215 to 335	130 to 210	430	645	860	714	814	914

2. Dimensions for double tier, standard floor mounted racks : single cell range

Cell type			2 tier rack					
			Depth (mm) No. of steps			Height (mm) No. of steps		
LC..P	MC..P	HC..P	2	3	4	2	3	4
10 to 59	9 to 55	9 to 34	500	715	930	1565	1665	1765
70 to 205	70 to 185	40 to120	500	715	930	1658	1758	1858
220 to 355	215 to 335	130 to 210	500	715	930	1714	1814	1914

3. Dimensions for single tier, standard floor mounted racks : extended cell range

Cell type			1 tier rack							
			Depth (mm) No. of steps				Height (mm) No. of steps			
LB..P	MB..P	HB..P	1	2	3	4	1	2	3	4
385 to 470*	370 to 390*	-	-	430	645	860	-	690	790	890
510	415 to 460	230 to 305	-	430	645	860		690	790	890
600 to 770	505 to 690	345 to 460	-	580	870	-		690	790	-
860 to 1070	740 to 965	510 to 640	-	860	-	-	-	690	-	-
1280 to 1540	1040 to 1390	705 to 920	580	1160	-	-	590	690	-	-

* normal connection

4. Dimensions for double tier, standard floor mounted racks : extended cell range

Cell type			2 tier rack							
			Depth (mm) No. of steps				Height (mm) No. of steps			
LB..P	MB..P	HB..P	1	2	3	4	1	2	3	4
385 to 470*	370 to 390*	-	-	500	715	930	-	1695	1795	1895
510	415 to 460	230 to 305	-	500	715	930	-	1695	1795	1895
600 to 770	505 to 690	345 to 460	-	650	940	-	-	1695	1795	-
860 to 1070	740 to 965	510 to 640	-	930	-	-	-	1695	-	-
1280 to 1540	1040 to 1390	705 to 920	675	1230	-	-	1595	1695	-	-

* normal connection

Battery racks

5. designations for single and double tier, standard floor mounted racks : single cell range (diagrams 1 to 6)

Cell type			1 tier			2 tier		
			No. of steps			No. of steps		
LC..P	MC..P	HC..P	2	3	4	2	3	4
10 to 59	9 to 55	9 to 34	SGL2	SGL3	SGL4	ESGL2	ESGL3	ESGL4
70 to 205	70 to 185	40 to 120	SGL2	SGL3	SGL4	ESGL2	ESGL3	ESGL4
220 to 355	215 to 335	130 to 210	SGL2	SGL3	SGL4	ESGL2	ESGL3	ESGL4

6. designations for single and double tier, standard floor mounted racks : extended cell range (diagrams 7 & 8)

Cell type			1 tier				2 tier			
			No. of steps				No. of steps			
LB..P	MB..P	HB..P	1	2	3	4	1	2	3	4
385 to 510	370 to 460	230 to 305	-	SGL2	SGL3	SGL4	-	ESGL2	ESGL3	ESGL4
600 to 770	505 to 690	345 to 460	-	SGS2	SGS3	-	-	ESGS2	ESGS3	-
860 to 1070	740 to 965	510 to 640	-	SGT2	-	-	-	ESGT2	-	-
1280 to 1540	1040 to 1390	705 to 920	PGS2	SGU2	-	-	EPGS2	ESGU2	-	-

Battery racks

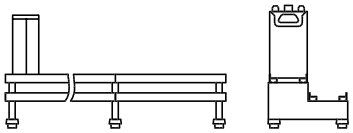

Diagram 1.
1 tier, 2 steps
normal mount

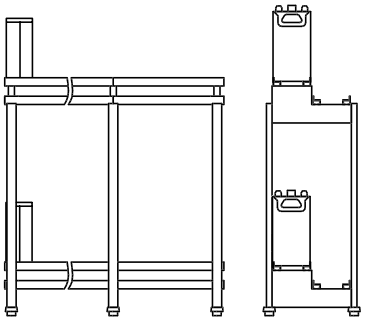

Diagram 2.
2 tiers, 2 steps
normal mount

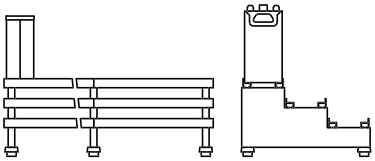

Diagram 3.
1 tier, 3 steps
normal mount

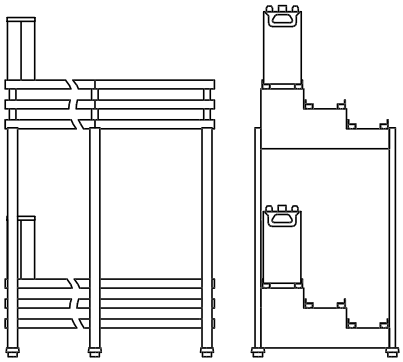

Diagram 4.
2 tiers, 3 steps
normal mount

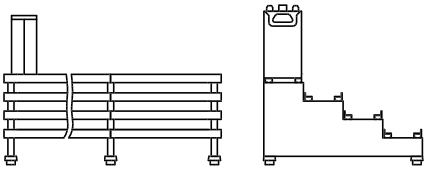

Diagram 5.
1 tier, 4 steps
normal mount

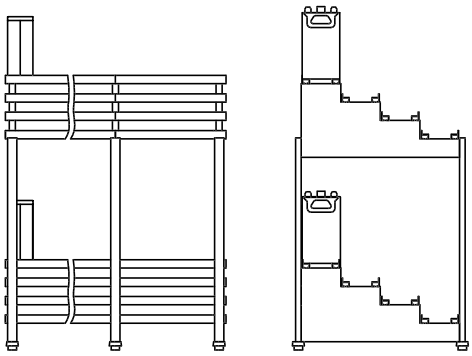

Diagram 6.
2 tiers, 4 steps
normal mount

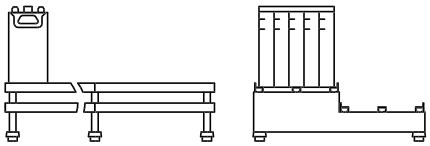

Diagram 7.
1 tier, 2 steps
crosswise mount

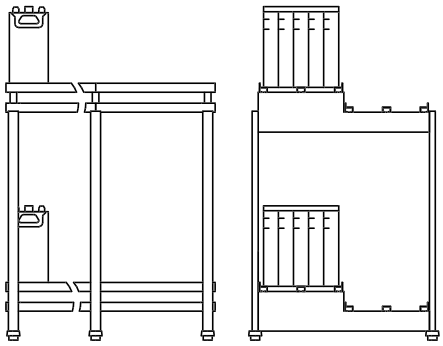

Diagram 8.
2 tiers, 2 steps
crosswise mount

Disposal and recycling

When a nickel-cadmium battery reaches the end of its long service live, Alcad strongly recommends its return for full recycling. The simple and unique natures of the battery's components make them readily recyclable.

A network of Alcad collection sites operates worldwide. If you use a small number of cells or batteries you may transport them to one of these sites. From here they will be sent to Alcad's Oskarshamn or other approved recycling plants for proper treatment.

Ni-Cd batteries must not be discarded as harmless waste. In most countries, users are legally responsible for their safe disposal. These batteries contain heavy metals with a corrosive liquid and must be treated carefully in accordance with local and national government regulations.

If you intend to handle spent batteries you should familiarise yourself with regulations governing reportable storage quantities and allowable storage periods. Your local Alcad representative can assist you with full information on these regulations and the whole recycling procedure.

Ask your local representative for other publications that provide greater detail on recycling industrial Ni-Cd batteries:

Industrial Ni-Cd batteries and the environment –
Your questions answered

Recycling of industrial Ni-Cd batteries

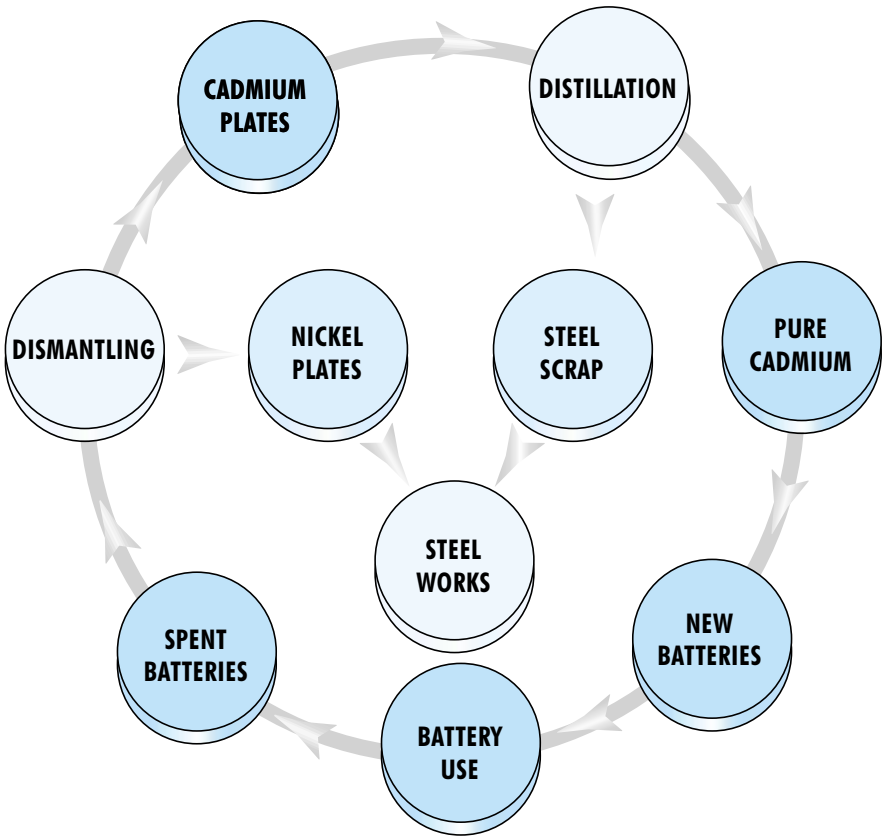

S2.3 - 2 - 7k0103. AA - Printed in UK.
Data in this document are subject to change without notice
and become contractual only after written confirmation by Alcad.

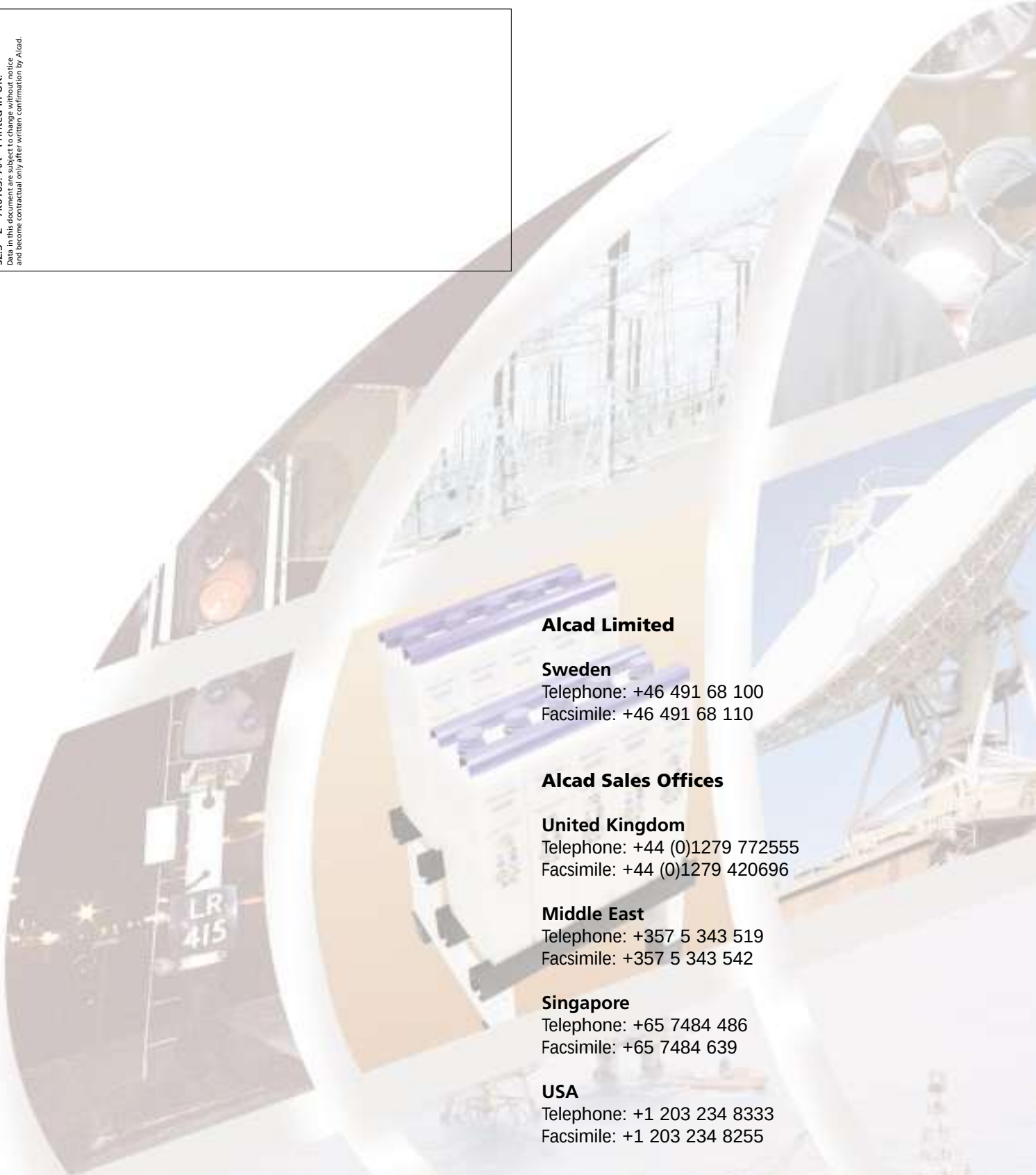

Alcad Limited

Sweden
Telephone: +46 491 68 100
Facsimile: +46 491 68 110

Alcad Sales Offices

United Kingdom
Telephone: +44 (0)1279 772555
Facsimile: +44 (0)1279 420696

Middle East
Telephone: +357 5 343 519
Facsimile: +357 5 343 542

Singapore
Telephone: +65 7484 486
Facsimile: +65 7484 639

USA
Telephone: +1 203 234 8333
Facsimile: +1 203 234 8255

Delivering quality

ALCAD